Electronics for
Positive Displacement Flow Meter
S2000D Series - Dual-sensor

1). Single Pulse Output with 4 X Pulse Resolution

Specifications	
Power supply	10…30VDC
No load current	<9mA
Output	Push-Pull (PNP / NPN)
Reverse polarity protection	Yes
Short circuit protection	Yes
Ambient temperature	-40…185°F (-40…85°C)
Probe operating temperature	-40…210°F (-40…98°C)
	-40…300°F (-40…148°C)
	-40…450°F (-40…232°C)
Electrical connection	M12 x 1 plug
Protection class	IP67

Wiring

M12 plug

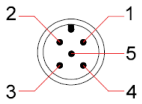

Pin	Color	Signal
1	Brown	Power +
4	Black	Pulse
3	Blue	Power -

PNP

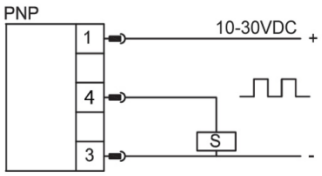

NPN

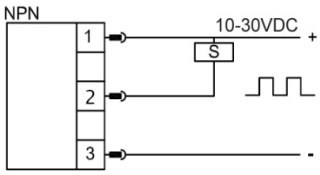

2). Dual-pulse Output (Quadrature signal with 90° phase shift)

Specifications	
Power supply	10…30VDC
No load current	<9mA
Output	Push-Pull (PNP / NPN)
Reverse polarity protection	Yes
Short circuit protection	Yes
Ambient temperature	-40…185°F (-40…85°C)
Probe operating temperature	-40…210°F (-40…98°C)
	-40…300°F (-40…148°C)
	-40…450°F (-40…232°C)
Electrical connection	M12 x 1 plug
Protection class	IP67

Wiring

M12 plug

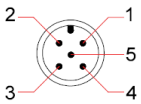

Pin	Color	Signal
1	Brown	Power +
2	White	Pulse
4	Black	Pulse
3	Blue	Power -

PNP

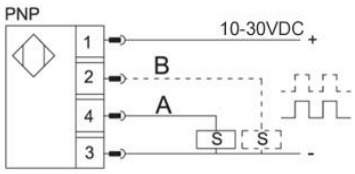

NPN

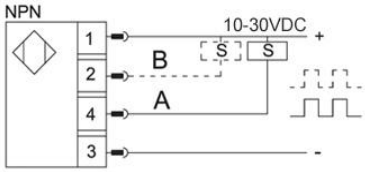

3). 4…20mA Output with Flow Directional Detection

Specifications	
Power supply	10…30VDC
No load current	<9mA
Output	4…20mA + switch signal (for flow direction)
Reverse polarity protection	Yes
Short circuit protection	Yes
Ambient temperature	-40…185°F (-40…85°C)
Probe operating temperature	-40…210°F (-40…98°C)
	-40…300°F (-40…148°C)
	-40…450°F (-40…232°C)
Electrical connection	M12 x 1 plug
Protection class	IP67

Wiring

M12 plug

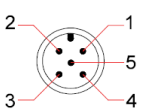

Pin	Color	Signal
1	Brown	Power +
2	White	4…20mA
4	Black	Switch output
3	Blue	Power -

PNP

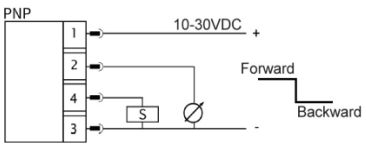

NPN

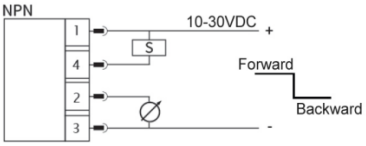

4). -10...10V Output

Specifications	
Power supply	10…30VDC
No load current	<9mA
Output	-10…10V
Reverse polarity protection	Yes
Short circuit protection	Yes
Ambient temperature	-40…185°F (-40…85°C)
Probe operating temperature	-40…210°F (-40…98°C)
	-40…300°F (-40…148°C)
	-40…450°F (-40…232°C)
Electrical connection	M12 x 1 plug
Protection class	IP67

Wiring

M12 plug

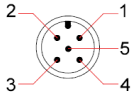

Pin	Color	Signal
1	Brown	Power +
2	White	Output
3	Blue	Power -

-10…10V

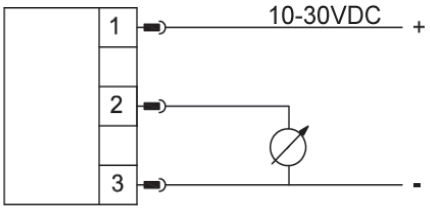

Dimensions in mm

For Flow Meters Measuring Range Up To

7 GPM	20 GPM	60 GPM
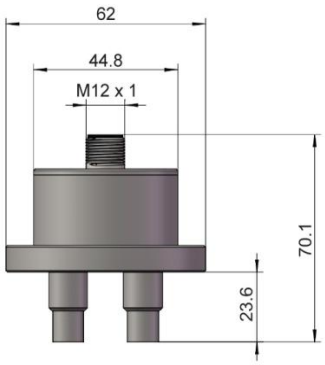	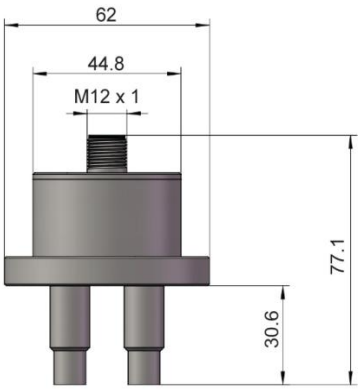	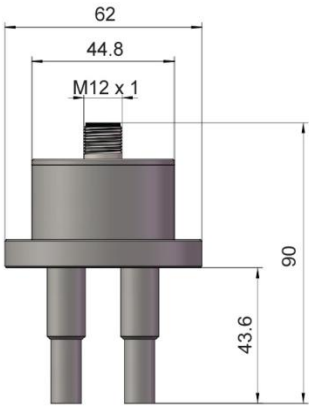

Order code

1. Model	
S2000D-	Dual-sensor for positive displacement flow meter

2. Output	
P1	Single pulse output with 4 x pulse resolution
P2	Dual-pulse Output
A	4…20mA with Flow Directional Detection
V	-10…10V

3. Temperature	
T1	-40…210°F (-40…98°C)
T2	-40…300°F (-40…148°C)
T3	-40…450°F (-40…232°C)