Positive Displacement Flow Meter
GF100 Series - Industrial

Introduction

The GF100 positive displacement flow meter operates on the volumetric principle, utilizing precision rotors that rotate in direct proportion to the flow rate, with speed monitored by a high-precision sensor.

Featuring a robust design rated up to 10,000 psi, diverse end fittings, and stainless steel ball bearings, it is ideal for demanding industrial applications.

It offers a measurement range of 0.005 to 120 GPM (0.02 to 450 LPM), with optional pickups for pulse, analog, or combined analog/alarm outputs.



Features

Range: 0.005 to 120 GPM (0.002 to 450 LPM)

Analog / Pulse output

Bi-directional flow measurement

High accuracy and repeatability

Higher trundown ratio

Ideal for non-lubricating fluids

Applications

Chemical processing

Oil & Gas

Hydraulic & Lubrication

Painting and Coating

Automotive

Aviation ...

Specifications

Applicable Medium	Liquids
Accuracy	±0.5% of reading (turndown ratio 10:1)
	±1% of reading (full range)
Repeatability	±0.1% of reading
Pressure Rating	See measuring range below for details
Medium Temperature	-40…210°F (-40…98°C)
	See electronics datasheet for higher options.
Materials	Housing: 316L SS / 304 SS / Aluminum
	Gear: Duplex SS
	Sealing: FKM / NBR / PTFE / EPDM
	Bearing: SS Ball Bearing
	Shaft: Tungsten Carbide
	Bolts: Carbon Steel
Certification	ISO 9001; CE

Flow Range

Part Code	End Fitting (Female Thread)	Flow Range		K Coefficient		Max. Filter Diameter (Micron)	Max. Pressure (psi)	
		GPM	LPM	Pulses/Gal	Pulses/L		316L SS	Aluminum
R2	1/4" (NPT / BSPP)	0.005…0.53	0.02…2	70,000	18,500	30	6,000 psi (420 bar)	3,600 psi (250 bar)
R3	1/4" (NPT / BSPP)	0.008…0.79	0.03…3	51,100	13,500	30		
R7	1/4" (NPT / BSPP)	0.02…1.98	0.075…7.5	15,700	4,155	30		
R25	1/2" (NPT / BSPP)	0.06…6.6	0.25…25	6,380	1,685	30		
R40	1/2" (NPT / BSPP)	0.1…10.57	0.4…40	2,900	765	30		
R75	3/4" (NPT / BSPP)	0.2…19.8	0.75…75	1,700	450	200		
R150	1" (NPT / BSPP)	0.4…39.6	1.5…150	510	135	200	5,000 psi (345 bar)	2,100 psi (150 bar)
R225	1-1/4" (SAE Flange)	0.6…59.4	2.25…225	416	110	200		
R450	1-1/4" (SAE flange)	1.1…118.9	4.5…450	208	55	200		

Dimension in mm

Flow Range: R2

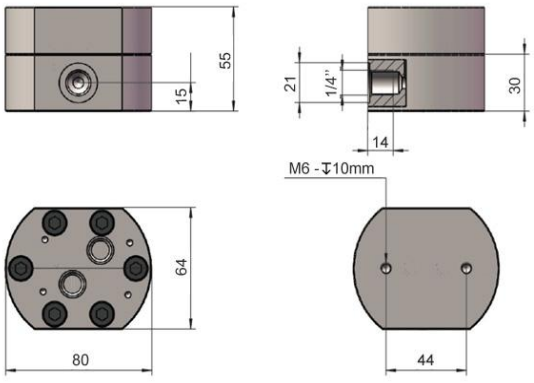

Flow Range: R3

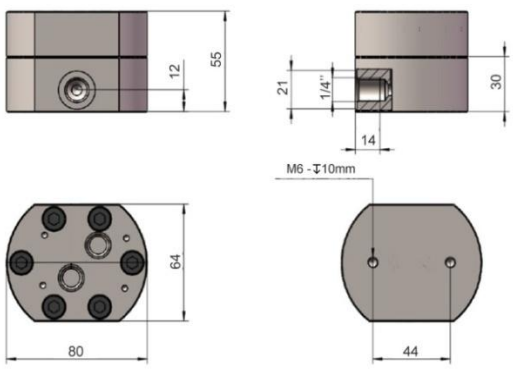

Flow Range: R7

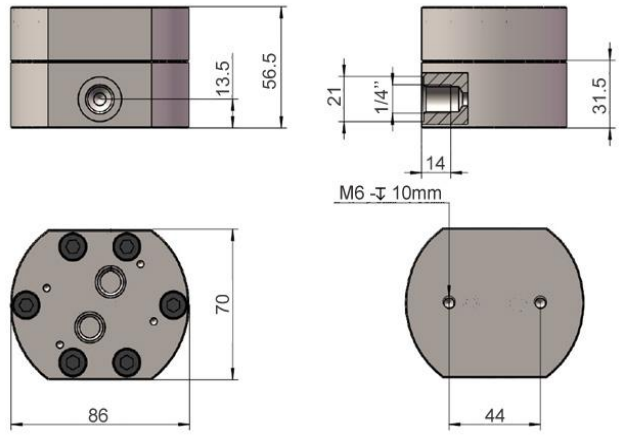

Flow Range: R25

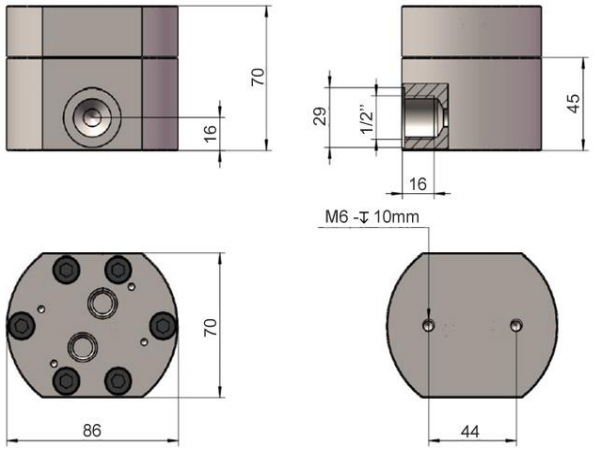

Flow Range: R40

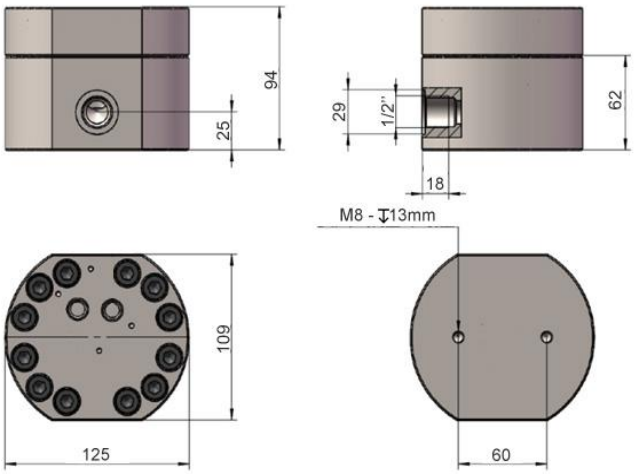

Flow Range: R75

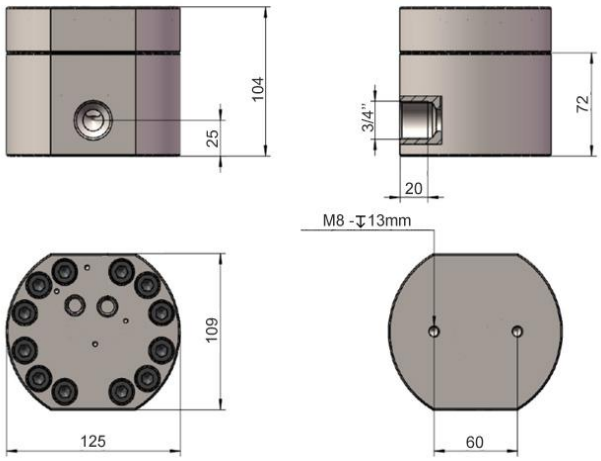

Flow Range: R150

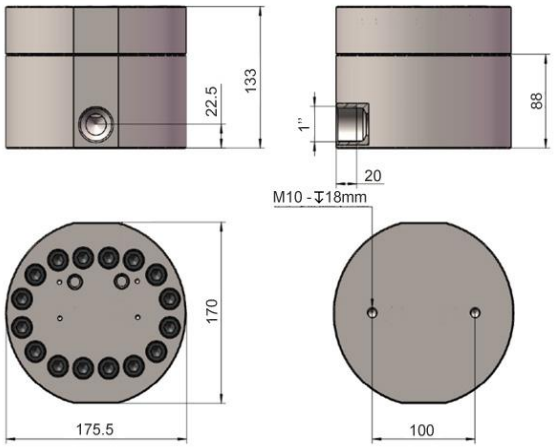

Flow Range: R225

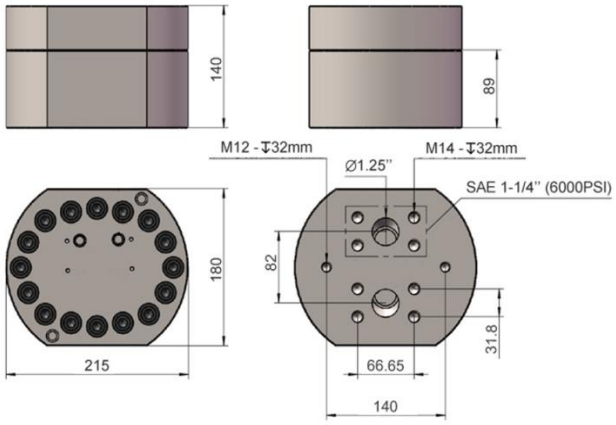

Flow Range: R450

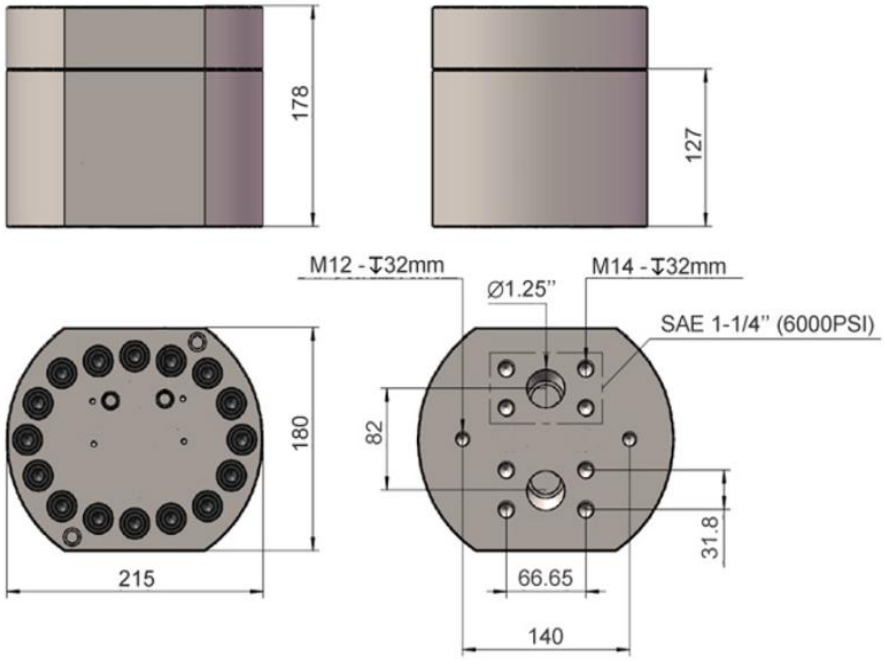

Order Code

Example: GF100-R7GFFS4

1. Model	
GF100-	Industrial Positive Displacement Flow Meter

2. Flow Range	
R3	Select a part code from flow range table above.

3. End Fitting	
GF	BSPP female thread
NF	NPT female thread
BP	Manifold Mount (bottom port)
S	Other connections on request

4. Sealing Material	
F	FKM (standard)
B	NBR
P	PTFE
E	EPDM

5. Housing Material	
A	Aluminum
S4	304 stainless steel
S6	316L stainless steel

See next page for electronics options

Electronics Options

S2000 Pickup Coils / Transmitters
Amplified Pulse
Linearized 4…20mA Output



S2000D Dual-Sensor
Dual-Pulse / Analog Output
Flow Directional Detection



DE500 Local Display
Local Display
4…20mA + Alarm Outputs



SA500 Pickup Coils
Intrinsically Safe
Amplified Pulse



SX500 Flow Transmitters
Explosion-Proof
Modbus RS485



Refer to the electronics datasheet for details.